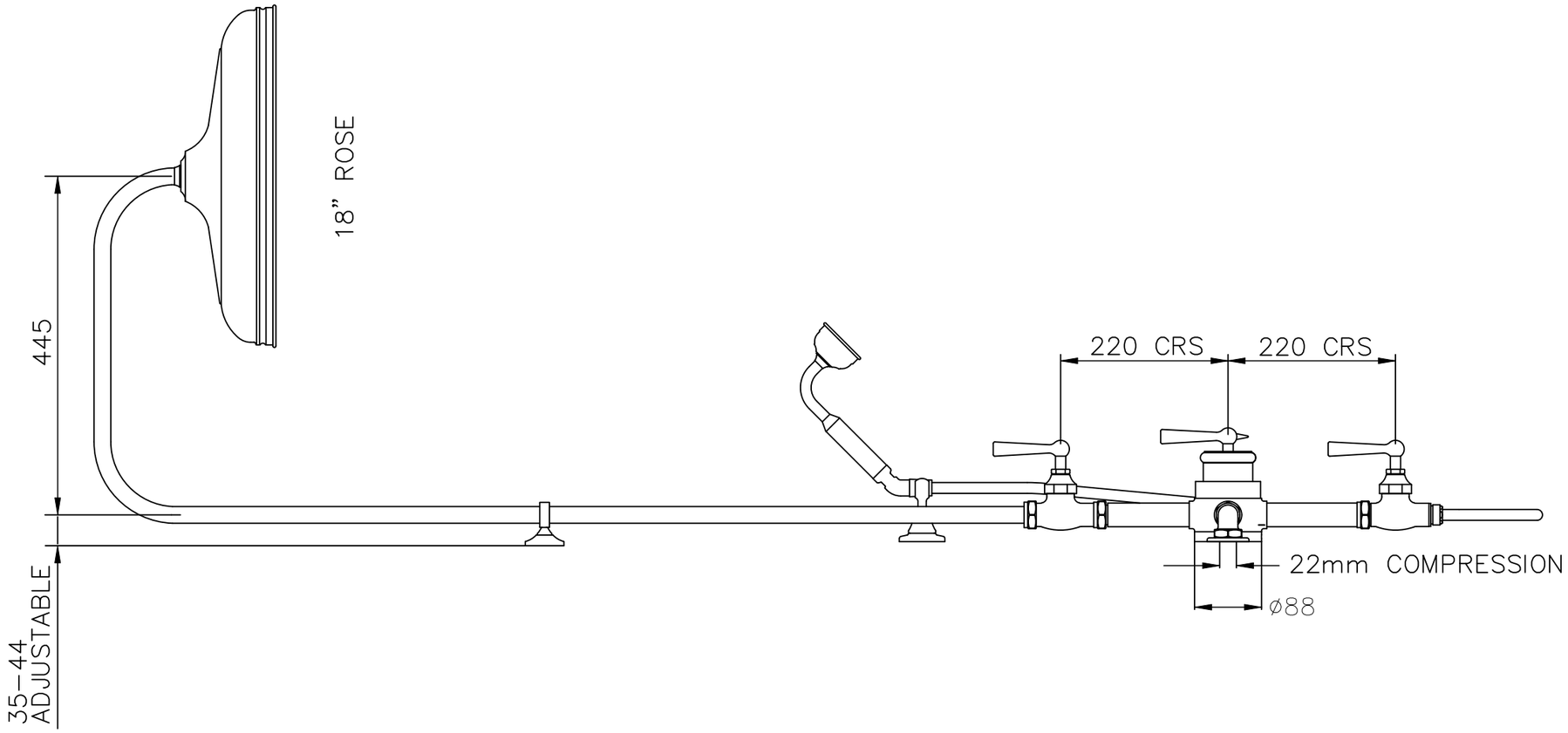

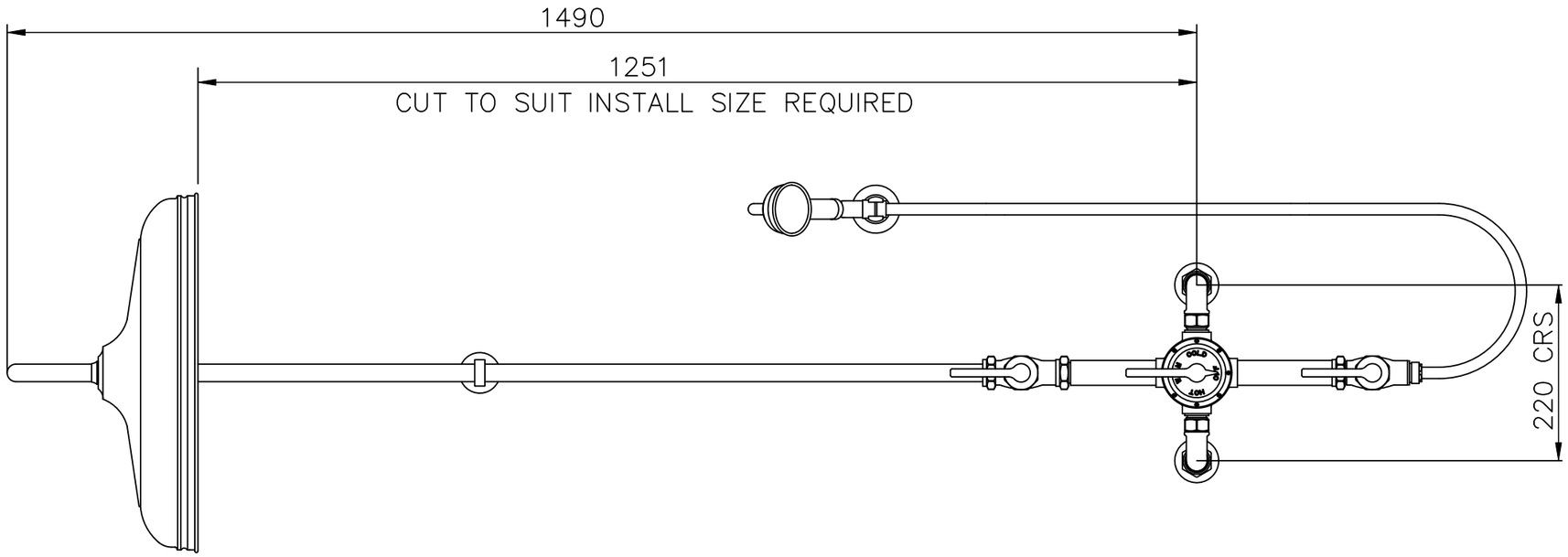

PLEASE NOTE THE MEASUREMENTS GIVEN ARE A GUIDE ONLY.

UNLESS OTHERWISE SPECIFIED
DIMENSIONS ARE IN MILLIMETERS

BEN-1833CL-MON2018 version 10.03.21

Thermostatic Valve Lever - 22mm Riser
445 Reach - 18" Rose With Handset Wall Kit